APPLICATION INFORMATION

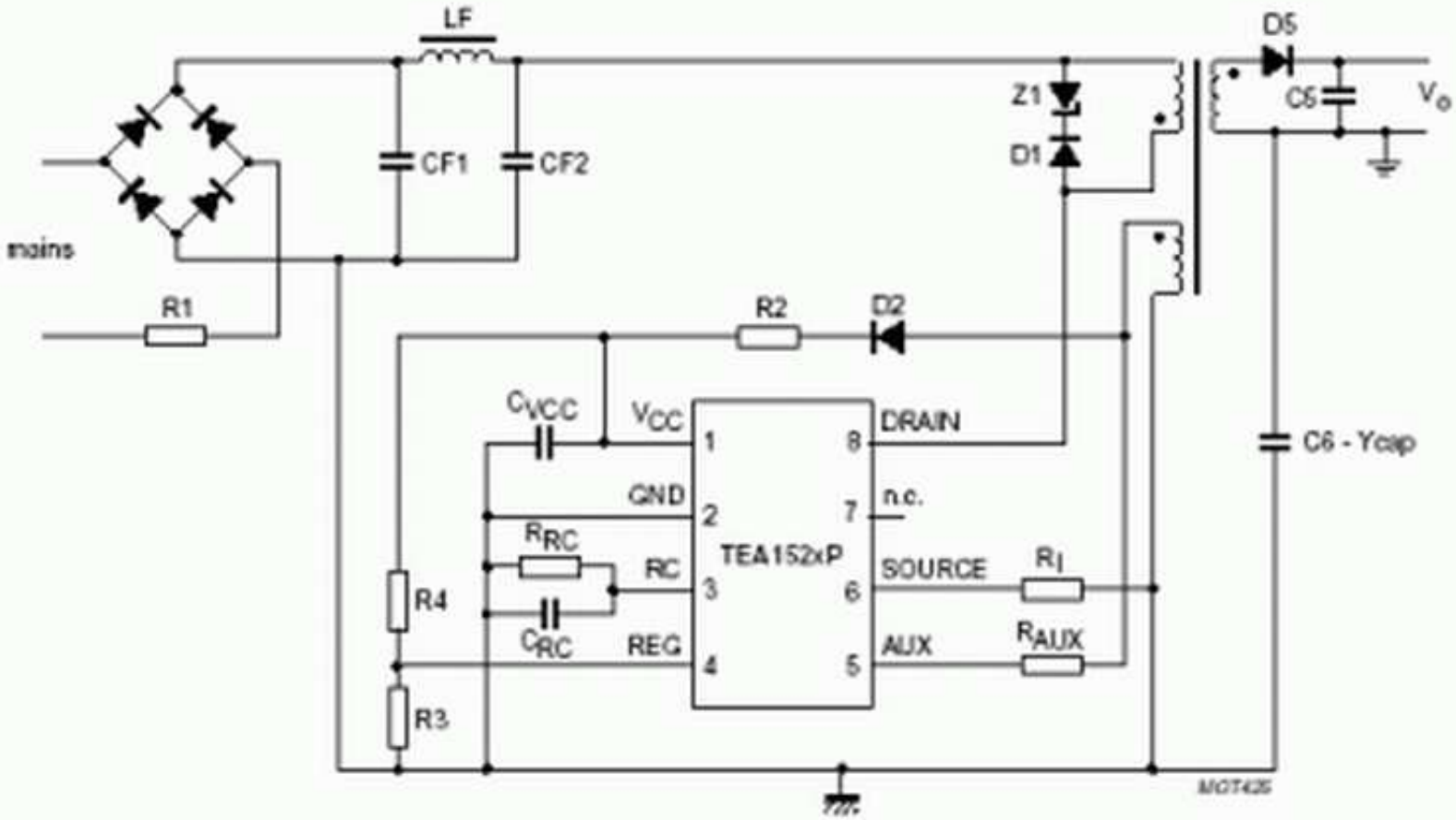

Fig.7 Primary sensed application; configuration for TEA152xP.